Trio GENERATOR

OUTPUT VALUES

Standby Power	Voltage	230/400
Standby Power	kVA	330
Standby Power	kW	264
Standby Power	Amper	475
Prime Power	Voltage	230/400
Prime Power	kVA	300

Prime Power	kW	240
Prime Power	Amper	432

DIESEL ENGINE

Brand	Shanghai
Model	SC9H272e
Max. Total Output Pow. (kWm/hp)	263/340
Cylinder Displacement (lt)	8,8
Cylinder Orientation	6 Single Line
Bore x Stroke(mm*mm)	135*150
Compression Ratio	17;1
Governor Type	Electronic
Rotation	1500 RPM
Aspiration System	Turbo Charge
Injection	Direct
Cooling System	Water Cooled
Electrical System(V DC)	24
Oil Capacity (lt)	34,4
Engine Coolant Capacity (lt)	70
Fuel Cons. %50 (lt/h)	30.2
Fuel Cons. %75 (lt/h)	44.3
Fuel Cons. %100 (lt/h)	60.1

ALTERNATOR

Standby Power (kVa/kw)	330/263
Prime Power (kVa/kw)	297/237
Brand	TRIO
Output Voltage (V)	231/400
Frequency (Hz)	50
Stationary Vol. Regulation(±)	0,01
Short Circuit Current	%300 (10 sec)
Insulation	H
Protection	IP23
E ciency (%)	92
Overloading	110% for 1 hour
Power Factor (cos Q=0.8)	0,8
Tot. Harmonic Dist. Rate	<1 %
Connection Type	Star
Number of Pole	4
Number of Bearing	Single

DIMENSIONS & WEIGHT

Without Canopy	Width	1100 mm
Without Canopy	Length	2500 mm
Without Canopy	High	1650 mm
Without Canopy	Weight	2400 kg
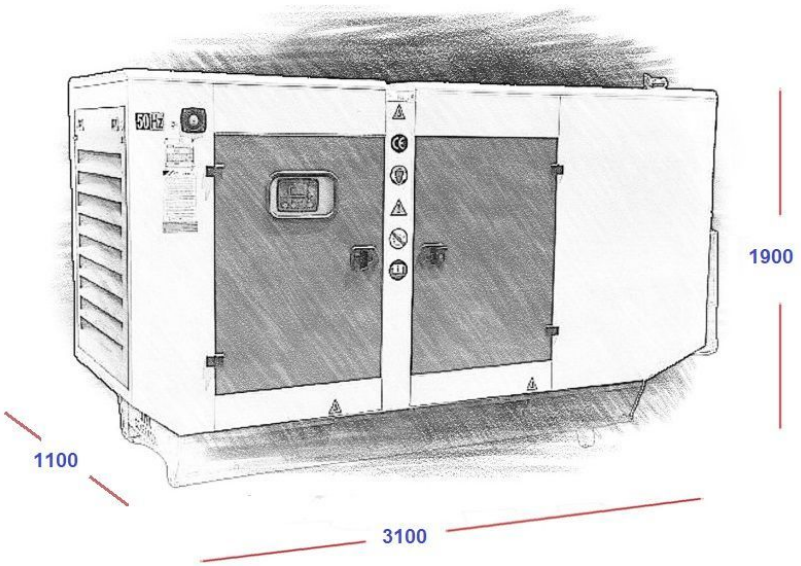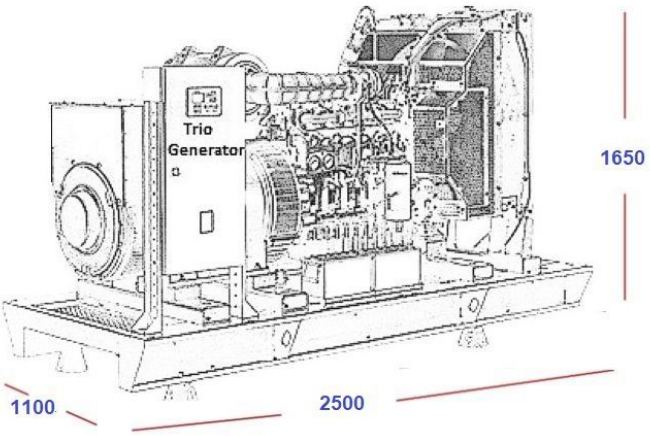
Without Canopy	Fuel Tank Capacity	280 lt
With Canopy	Width	1100 mm
With Canopy	Length	3100 mm
With Canopy	High	1900 mm
With Canopy	Weight	3150 kg
With Canopy	Fuel Tank Capacity	280 lt